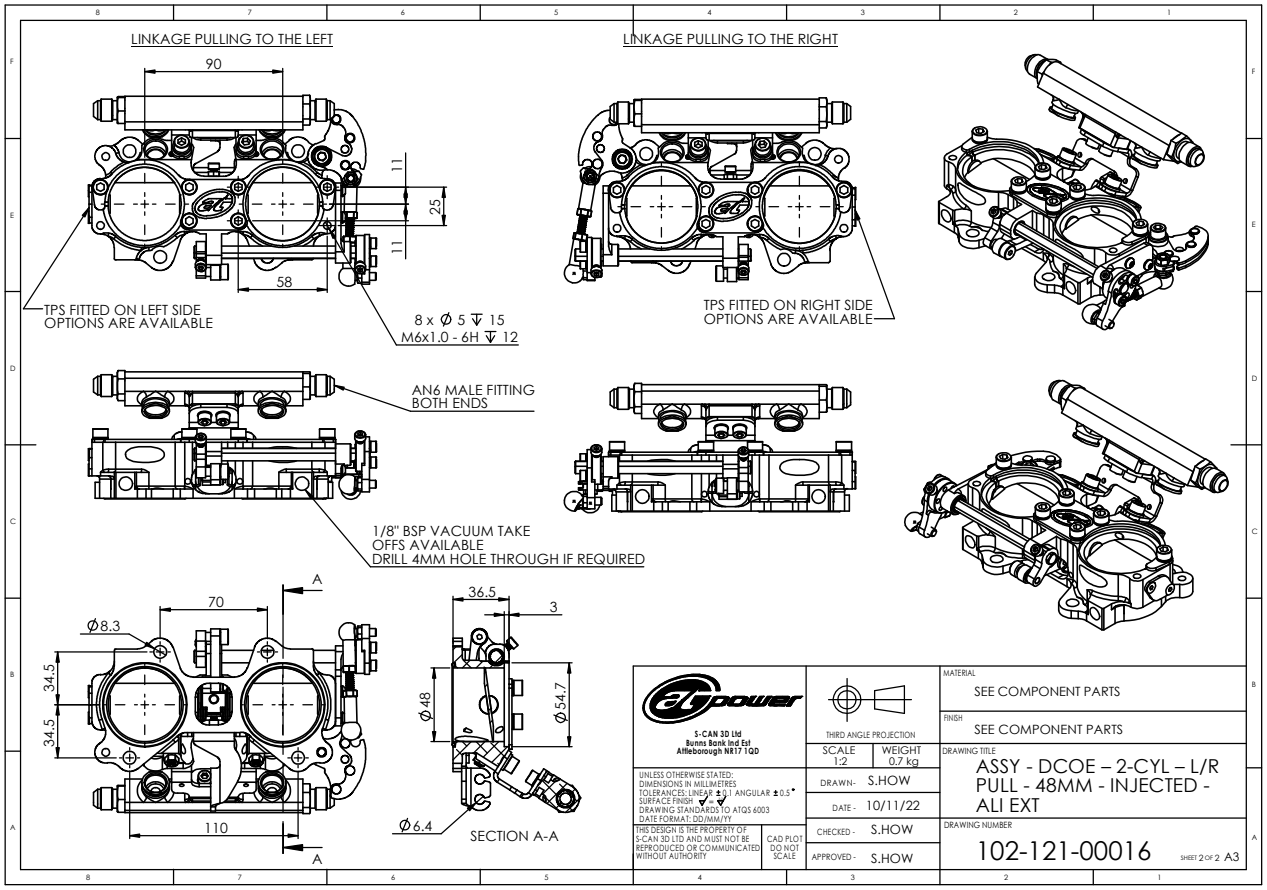

PRINTED: 14:17, 23/04/2026